C – D
1 : 1

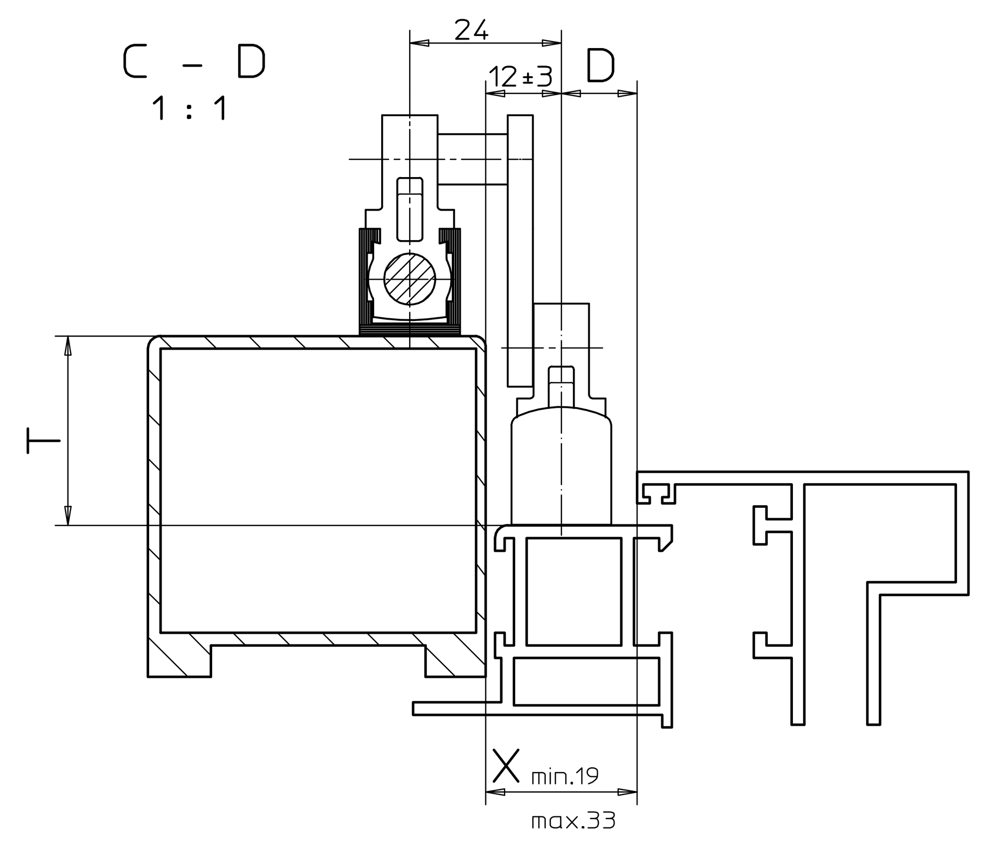

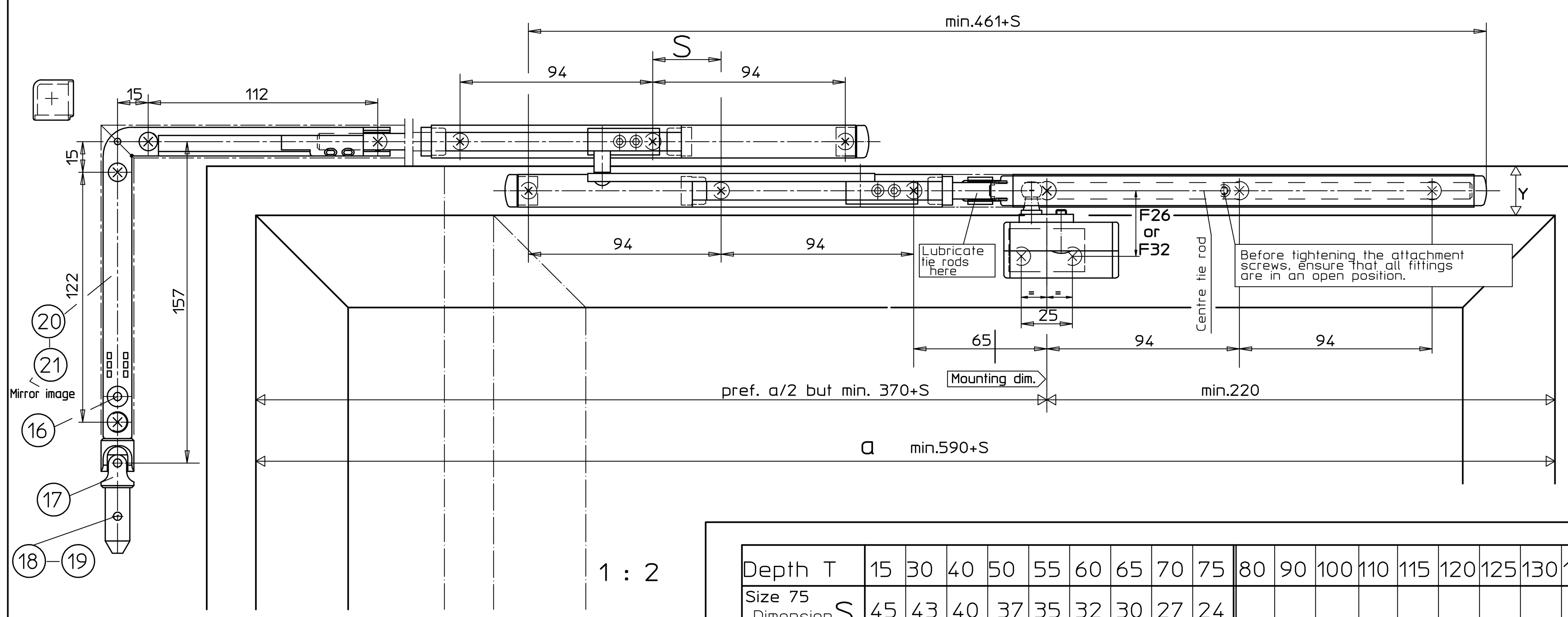

Transfer with gear Fz 90 L (Fz 90 R is mirror image)

Depth T	15	30	40	50	55	60	65	70	75	80	90	100	110	115	120	125	130	135	140	145	150
Size 75 Dimension S	45	43	40	37	35	32	30	27	24												
Size 150 Dimension S	185	184	183	182	180	179	178	177	175	174	171	168	164	161	159	156	154	151	148	145	142

Transfer with hand lever or gear Fz 91

1 : 2

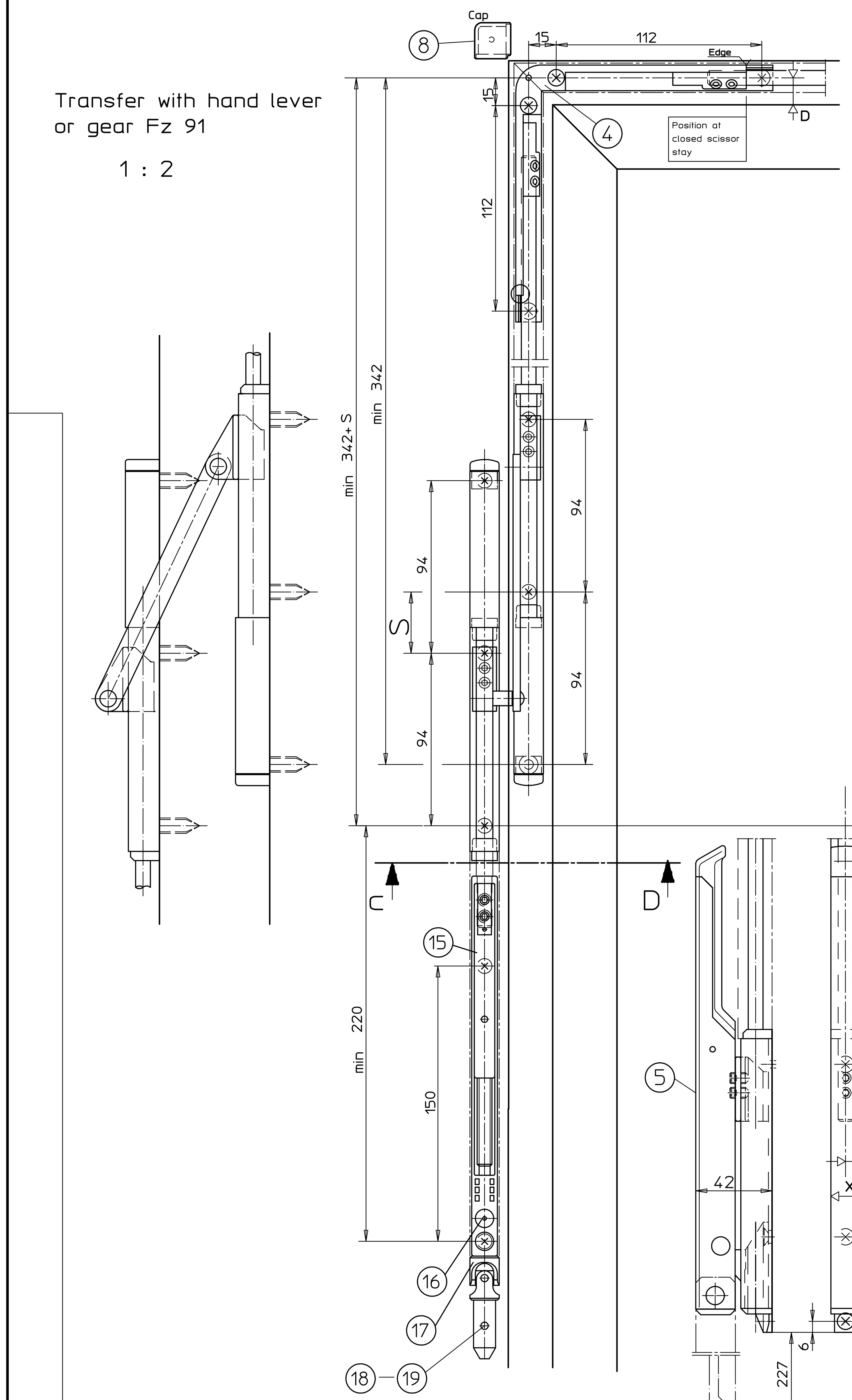

Transfer with electric drive E 212 1 : 2

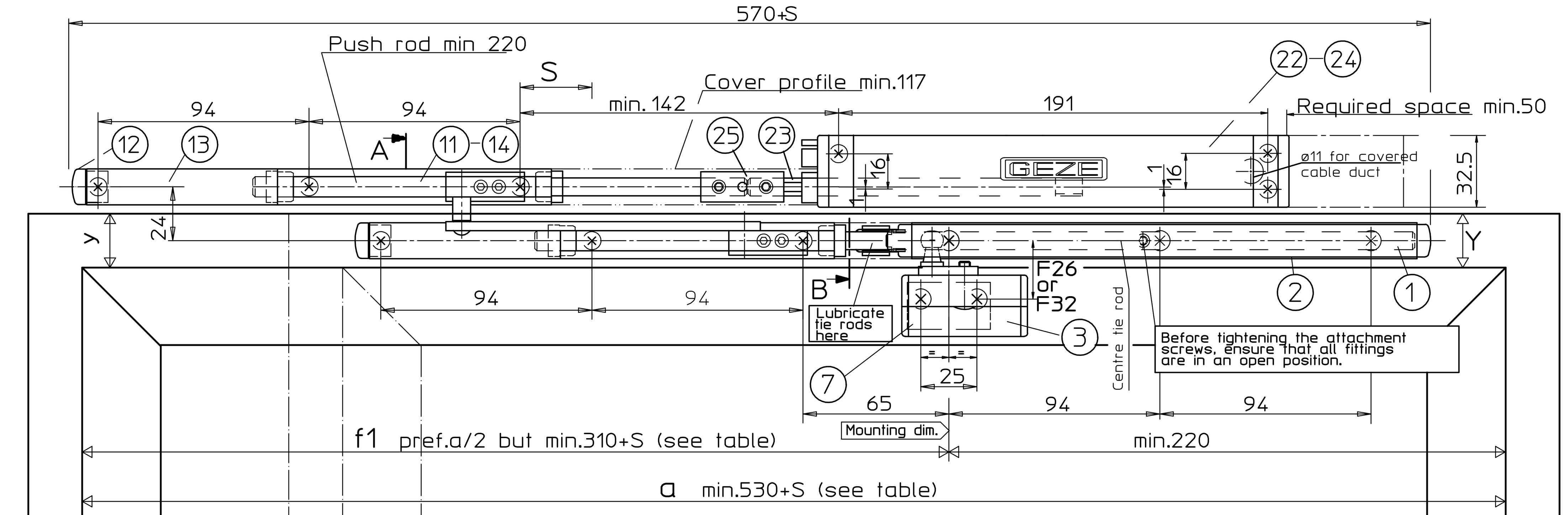

A–B
1 : 1

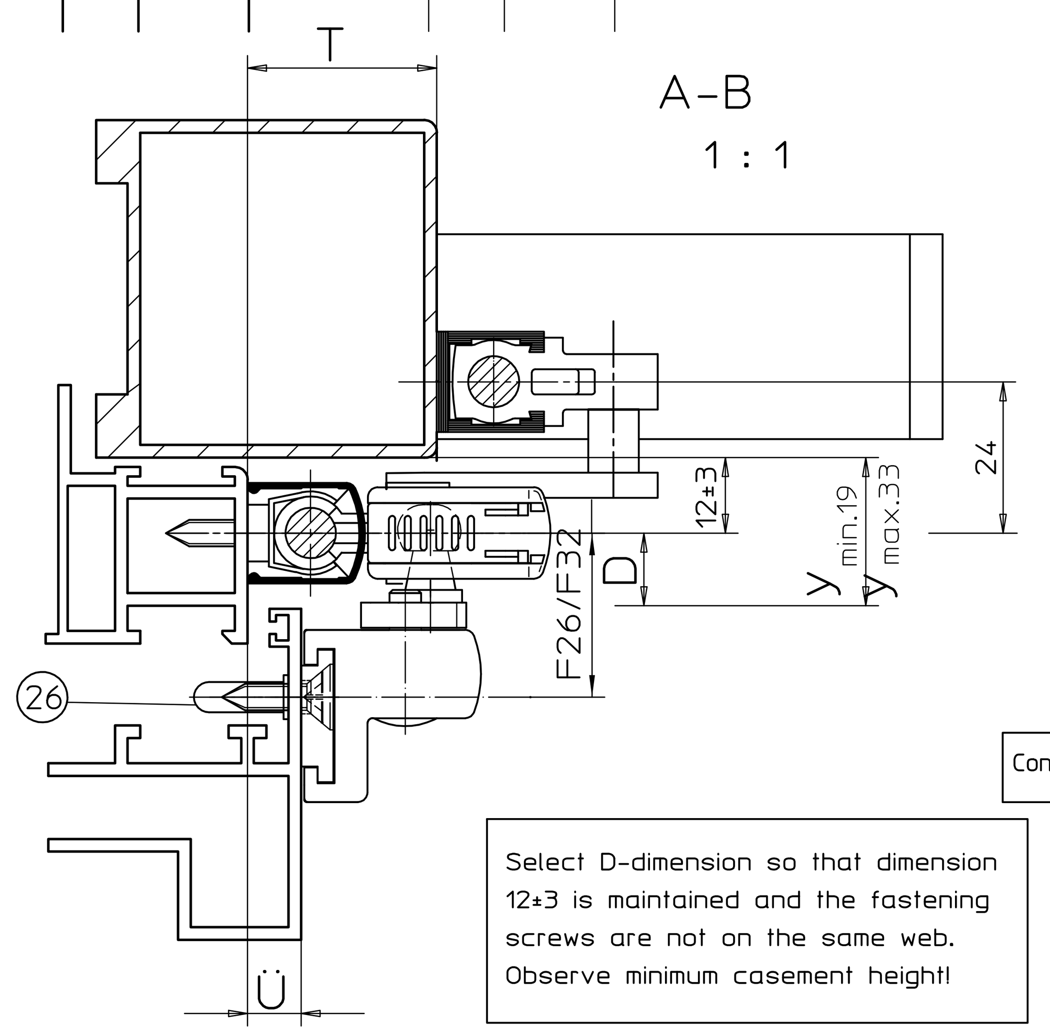

Connection (for cover profile)

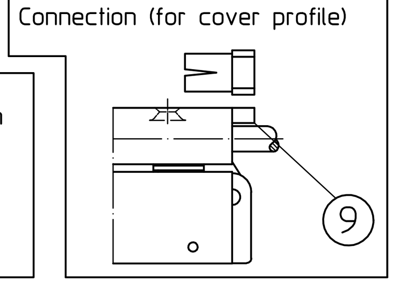

Select D-dimension so that dimension 12±3 is maintained and the fastening screws are not on the same web. Observe minimum casement height!

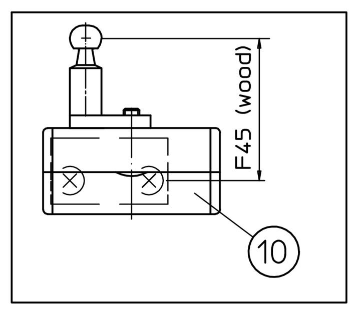

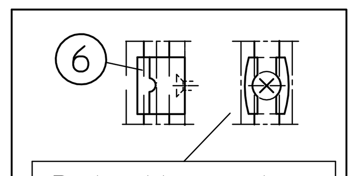

Rod guides must be used as of a free rod length of more than 600 mm.

Important:

- Mounting drawing, assembly instructions, requirements for maintenance and operation must be followed;
- The specified range of applications must be maintained;
- The mounting dimensions must be observed;
- The required fixtures must be used;
- To avoid injury, protective covers must be screwed onto projecting threads of the fastening screws;
- Fittings have been drawn in the closed position, however, assembly must occur in open position;
- All attachment screws in open position must be tightened with an Allen key SW3 with 5 Nm;
- After assembly and before operation check functions and make sure all clamping screws are tightened;
- Linkage and sliding points must be lubricated with an acid-free grease according to DIN 51825;
- The free accessibility of the fittings for lubricating and maintenance must be guaranteed according to DIN 18357;
- If rods or cover profiles of other manufacturers are used, GEZE will neither assume any liability nor for possibly occurring damages and consequential losses;
- As of a free rod length of 600 mm, rod guides must be used;
- For bottom-hung windows, using a suitable catch guard is mandatory (see GEZE catch guard and cleaning safety);

Range of applications

Only for vertically installed rectangular windows with bottom-hung or top-hung casements inwards

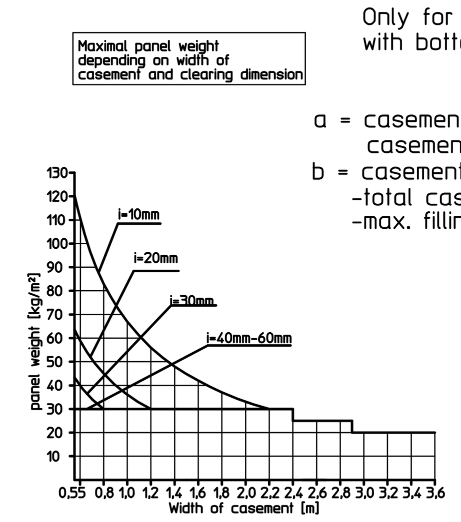

a = casement width, total casement width (sum of all casement widths) see table (a min. see drawing)
b = casement height min. 250mm
-total casement weight max. 80kg
-max. filling weight:

a second scissor stay is required as of a casement width of 1200mm and a third scissor stay as of 2400mm

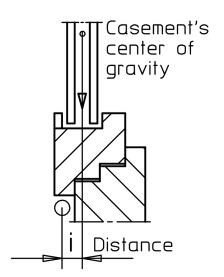

i = distance, casement centre of gravity to hinge fulcrum = 10 to 60mm
O = overlap height 0-25mm
D = outer edge casement up to centre rod linkage (see table)
X = side clearance required min.19mm
Y = clearance required above casement (see table)

Casement height b	Dimension D, top	Y min.	Ymax. at transfer
250 to 300mm	16 to 18mm	D + 9 mm	33mm
300 to 400mm	12 to 18mm	D + 9 mm	
over 400mm	10 to 18mm	D + 9 mm	

T = pillar or crossbar projection as of window frame
= 0-75 for size 75
= 0-150 for size 150
S = mounting dimension depending on T and transfer (see table)

Technical data

- Opening width approx. 170mm
- Mounting stroke 54mm

Supplemental details and notes, see Mounting Drawing:

OL 90 N with hand lever	40444-EP-001
OL 90 N with electric drive E 212	40444-EP-003
OL 90 N with gear Fz 91; Fz 90 L/R	40444-EP-008
OL 90 N connecting rods and accessories for gears Fz 90;Fz 91;Fz 92	40444-EP-011

Fixtures

Type of window	Fixing screws	Hole ø
Wood	Countersunk wood screws 4x35 DIN 97 or DIN 7997	2,5mm
Light alloy	Counters. self-tap. scr.4.2xL DIN7972 or DIN7982 Screw must pass through at least 1.8mm profile wall	3,5mm
Plastic	Counters. self-tap. scr.4.2xL DIN7972 o. DIN7982 Screw must penetrate at least 2 window section walls	3,5mm

Fastening screws not included.

Ordering requirement for rectangular window OL 90 N and transfer with		Fittings (see parts list) A	B+B1	C	D/E	F	G/H	J/K	L
Hand lever	Light alloy/plastic window	X		X	X				
	Wood window		X	X	X				
Gear Fz 91	Light alloy/plastic window	X			X	X			
	Wood window		X		X	X			
Gear Fz 90 right/left	Light alloy/plastic window	X			X		X		
	Wood window		X		X		X		
Electric drive E 212	Light alloy/plastic window	X			X			X	X
	Wood window		X		X			X	X

Item	Pcs.	Designation	ID No. for design: EV1	white RAL9016	dark bronze	black	RAL...	Pcs.
A		Scissor stay OL 90 N Contents:	30373	30377	30374	74509	30376	6
1	1	Flat type scissor stay OL 90 N						
2	1	Scissor stay base						
3	1	Casement bracket						
6	1	Rod guide						
7	1	Fixing plate						
9	1	Connection						
26	2	Protective cover						
B		Scissor stay OL 90 N without casement bracket Contents:	71203	71207	71204	99477	71206	4
	1	Item: 1; 2; 6; 9;						
B1		Casement bracket for wood window with Euro-slot Contents:	30886	30890	30887	99475	30889	2
10	1	Cas. bracket for wood window						
7	1	Fixing plate						
C		Hand lever with corner transmission Contents:	30611	30615	30612	77945	30614	7
4	1	Corner transmission						
5	1	Hand lever OL 90 N						
6	1	Rod guide						
8	1	Cap						
D		Transfer OL 90 N T = 0 to 75mm Contents:	30744	30748	30745	30747 RAL schwarz	30747	6
11	1	Transfer Size 75						
12	2	End cap						
13	2	Cover						
E		Transfer OL 90 N T = 0 to 150mm Contents:	30749	30753	30750	30752 RAL schwarz	30752	6
14	1	Transfer Size 150						
12	2	End cap						
13	2	Cover						
F		Corner angle with gear Fz 91 Contents:	30817 galvan.	30817 galvan.	30818 black	30818 black	30817 or 30818	6
4	1	Corner transmission						
15	1	Gear						
16	1	Headless set screw M4x10.8						
17	1	Universal joint						
18	1	Dowel pin 4x16 for fixed connecting rod						
19	1	Dowel pin 4x20 for removable connecting rod						
9	1	Cap						
G		Corner angle with gear Fz 90 left Contents: Item: 16; 17; 18; 19; 8	30809 galvan.	30809 galvan.	30810 black	30810 black	30809 or 30810	4
20	1	Corner angle with gear Fz90L						
H		Corner angle with gear Fz 90 right Contents: Item: 16; 17; 18; 19; 8	30811 galvan.	30811 galvan.	30812 black	30812 black	30811 or 30812	4
21	1	Corner angle with gear Fz 90 R						
J		Electric drive E 212 R1 for group control Contents:	20835	20839	20836	20838 RAL schwarz	20838	3
22	1	E 212 R1/230V AC						
23	1	Connection rod						
K		Electric drive E 212 R for group control Contents:	05428	15435	05429	06683 RAL schwarz	06683	3
24	1	E 212 R/230V AC						
23	1	Connection rod						
L 25	1	Rod coupler for OL 90	43546					
		Rods and cover profiles						
		Cover profile L=2m *	30401	30405	30402	74537	30404	
		Cover profile L=3m *	30396	30400	30397	74539	30399	
		Cover profile L=6m	27558	27561	27559	74540	28342	
		Rod ø8 galvanised L=2m	16555					
		Rod ø8 galvanised L=3m	16591					
		Rod ø8 galvanised L=6m	16592					
		Accessories (must be ordered separately) Drilling template	for wood 54799 yellow		for plastic/metal 54800 blue			
		Auxiliary drilling template OL 90 N for wood window F=45	28141					
6	10	Rod guide	10878					1 each

* Cover profile cut on both sides to mitre

02	22.07.2010	tbf5	49068	
01	24.11.2006	tbm14	47863	
00	12.08.2004	tbe7	47186	
EMPB	Dok.version doc.version	Datum date	Name name	Mitteilungs-Nr. Doc. change no.

GEZE GmbH
P.O. Box 13 63
71226 Leonberg
Germany

vertraulich / confidential

Benennung / designation
OL 90 N pillar-frame
transfer supplementary sheet

	Datum / date	Name / name
erstellt / drawn	22.07.2010	tbf5
gepr. / checked	07.09.2010	tbf6

Ersatz für: / subst. for: 40444-0-014
Ersetzt durch: / subst. with:

Blatt / von / sheet / of: 1 / –
Maßstab / scale: 1:1
Sprache / language: GB
Material-Nr. / ID-no.
Zeichnungs-Nr. / document-no.: 40444-EP-014

Diese Zeichnung entspricht dem Entwicklungsstand des Zeichnungsdatums bzw. der letzten Änderungseintragung. Aus der Benützung der Zeichnung können keine Ansprüche, gleich welcher Art, einschließlich Schadenersatzansprüche, abgeleitet und gegen GEZE geltend gemacht werden. Die Zeichnung bleibt unser Eigentum und ist Dritten nur für die Vertragsdauer zur Benutzung überlassen. Sämtliche sich aus der Zeichnung ergebenden Ansprüche stehen ausschließlich GEZE zu. Ohne vorherige Zustimmung von GEZE darf diese Zeichnung weder vervielfältig noch Dritten zugänglich gemacht werden.
This drawing shows the actual state of product development at the date of the drawing or the revision date. No claims or damages in any form can bei made against GEZE as a result of the interpretation of this drawing. This drawing remains the property of GEZE and ist made available to third paries only for the duration of contractural obligations. All rights connected with this drawing remain in possession of GEZE. This drawing may not bei copied of handed over to third parties without the express consent of GEZE.